DATA SHEET
DOOR DETECTOR 03.G5.L194

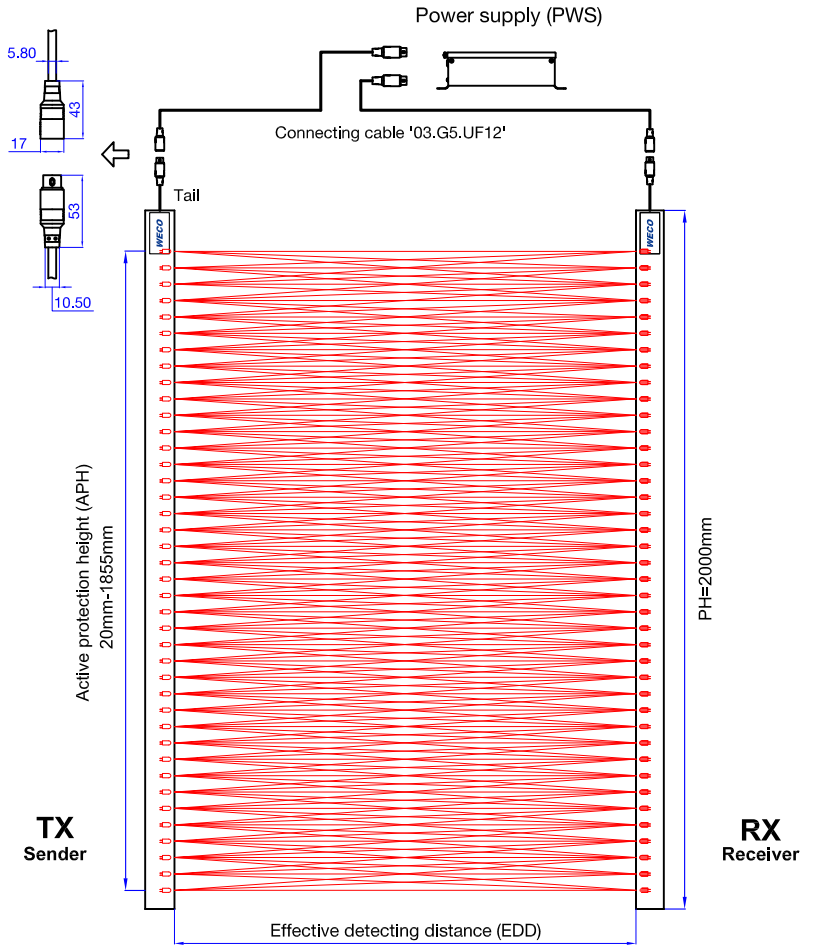

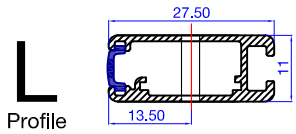

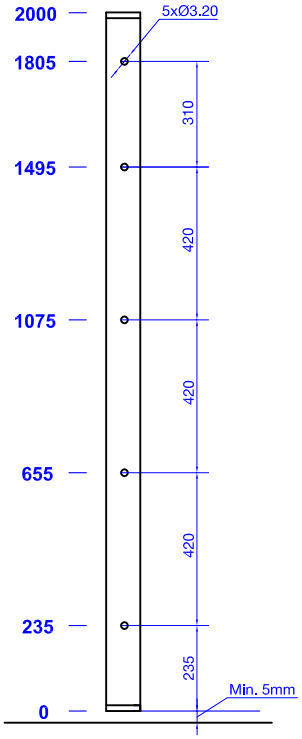

Fixing point positions

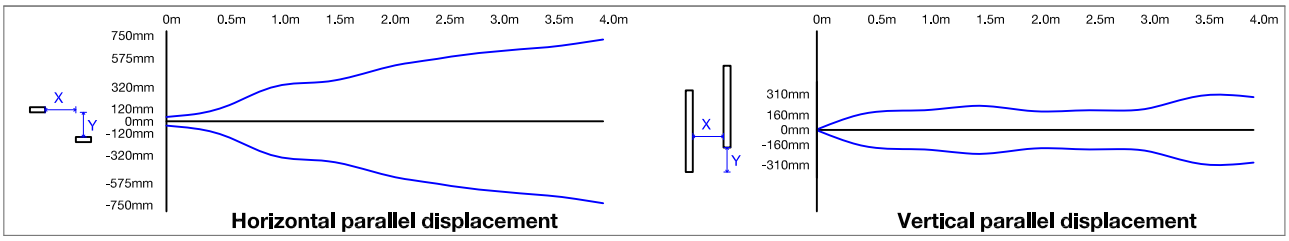

Horizontal parallel displacement **Vertical parallel displacement**

Max. number of beams		194
Diodes		40
Effective detecting dist.		0mm - 4000mm
Lowest beam (APH)		20mm
Uppermost beam (APH)		1855mm
Dist. between diodes		47.50mm
Response time		100ms
Light immunity		Sunlight immune
Profile height (PH)		2000mm
Profile material		Aluminium
Protection rating		IP54
Operating temperature		-20°C to +65°C
Alignment tolerance		Vertical: +/- 15mm (7°)
		Horizontal: +/- 3mm (5°)
LEDs in receiver	Yellow	Power indicator
	Red	☼ Beams interrupted or system fault
		● Normal

Signal output		Relay contact: 1 NO & 1 NC
Power consumption		<=4w or 100mA@24VDC
Power supply voltage		15VDC - 30VDC
LEDs in PWS	Green	Power indicator
	Red	☼ Beams interrupted or system fault
		● Normal
Internal wiring	Red	+
	Blue	-
	Yellow	Synchro
	Green	Output
Norms		EN 81-20
EMV - Emission		EN 12015
EMV - Immunity		EN 12016
QMS		ISO9001
EMS		ISO14001

info@wecoglobal.com

Doc. Nr.	03.G5.L194	Date	27.FEB.2017
Control	E317691F-DJ		